ENGLISH

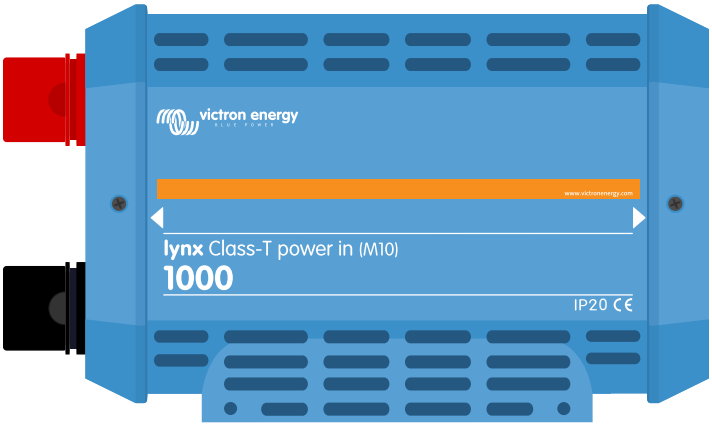

Lynx Class-T Power In

rev 01 - 10/2026

This manual is also available in HTML5.

Table of Contents

1. Safety Precautions **1**
1.1. Safety Warnings Lynx Distribution System 1
1.2. Transport and Storage 1

2. Introduction **2**
2.1. The Lynx Class-T Power In Distributor (M10) 2
2.2. The Lynx Distribution System 3

3. Features **4**
3.1. Internal parts and wiring diagram Lynx Class-T Power In 4

4. System Design **5**
4.1. Lynx distribution system parts 5
4.1.1. Interconnecting Lynx modules 6
4.1.2. Orientation of Lynx modules 7
4.1.3. System Example - Lynx Class-T Power In and Lynx Distributor 8
4.1.4. System example - Lynx Class-T Power In, Lynx Smart BMS and a Lynx Distributor 9
4.2. System sizing 9
4.2.1. Current rating Lynx modules 9
4.2.2. Fusing 10
4.2.3. Cabling 10

5. Installation **11**
5.1. Mechanical connections 11
5.1.1. Lynx module connection features 11
5.1.2. Mounting and interconnecting Lynx modules 11
5.2. Electrical connections 12
5.2.1. Connect DC wires 12
5.2.2. Ground and Negative connections 12
5.2.3. Positive connections 14

6. Lynx Class-T Power In commissioning **15**

7. Troubleshooting and Support **16**
7.1. Cabling issues 16

8. Technical specifications Lynx Class-T Power In **17**

9. Enclosure Dimensions Lynx Class-T Power In **18**

1. Safety Precautions

1.1. Safety Warnings Lynx Distribution System

- Do not work on live busbars. Ensure that the busbar is unpowered by disconnecting all positive battery poles prior to removing the Lynx front cover.
- Work on batteries should be carried out by qualified personnel only. Observe the battery safety warnings as listed in the battery manual.

1.2. Transport and Storage

Store this product in a dry environment.

The storage temperature should be: -40°C to +65°C.

No liability can be accepted for damage in transit if the equipment is not transported in its original packaging.

2. Introduction

2.1. The Lynx Class-T Power In Distributor (M10)

The Lynx Class-T Power In connects and fuses up to two strings of Lithium batteries. It features a positive and negative busbar, connections for two Class-T fuses, and a connection to ground the DC system. The Class T-fuses, available in 225A, 250A, 350A and 400A, must be purchased separately.

For installations using three or more strings of Lithium batteries, use multiple Lynx Class-T modules. As a core component of the Lynx Distribution system, the Lynx Class-T seamlessly integrates with all other M10 Lynx products.

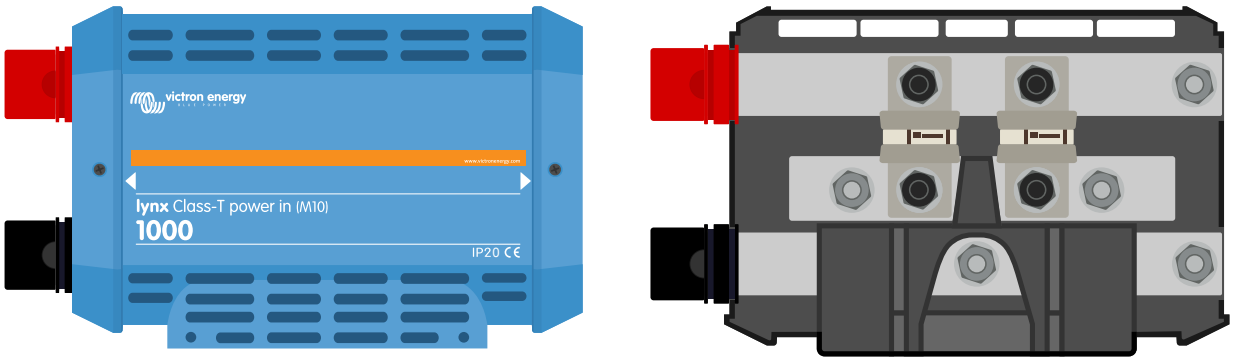

Lynx Class-T Power In Distributor (M10) - with and without cover

2.2. The Lynx Distribution System

The Lynx Distribution System is a modular busbar system that incorporates DC connections, distribution, fusing, battery monitoring and/or Lithium battery management. For more information, see the DC Distribution Systems product page.

The Lynx Distribution System consist of the following parts:

- **Lynx Power In** - A positive and negative busbar with four batteries or DC equipment connections, available with M10 busbar.
- **Lynx Class-T Power In** - A positive and negative busbar that accepts two Class-T fuses and has two battery or DC equipment connections, available with M10 busbar.
- **Lynx Distributor** - A positive and negative busbar with four fused connections for batteries or DC equipment and fuse monitoring, available in two versions, available with M10 busbar.
- **Lynx Shunt VE.Can** - A positive busbar with a space for a main system fuse and a negative busbar with a shunt for battery monitoring. It has VE.Can communication for monitoring and setup with a GX device. Available with M10 busbars.
- **Lynx Smart BMS** - For use together with Victron Energy Smart Lithium batteries. It contains a positive busbar with a contactor driven by a battery management system (BMS) and a negative busbar with a shunt for battery monitoring. It has Bluetooth communication for monitoring and setup via the VictronConnect App and VE.Can communication for monitoring with a GX device and the VRM portal. Available as a 500A model with M10 busbars or 1000A model with M10 busbars.

The Lynx modules: Lynx Power In, Lynx Class-T Power In, Lynx Distributor, Lynx Shunt VE.Can and Lynx Smart BMS

3. Features

3.1. Internal parts and wiring diagram Lynx Class-T Power In

The internal physical parts and the wiring diagram of the Lynx Class-T Power In indicating the following parts:

- Positive busbar
- Negative busbar
- Positive connections
- Negative connections
- Ground connection
- Two fuse connections for Class-T fuses - bolts and nuts are 3/8" and marked black to not confuse them with the M10 bolts and nuts for DC and busbar connections. Note that devices with a serial number starting with HQXXXX have M10 screws and nuts for the fuse connections. They are not marked black.

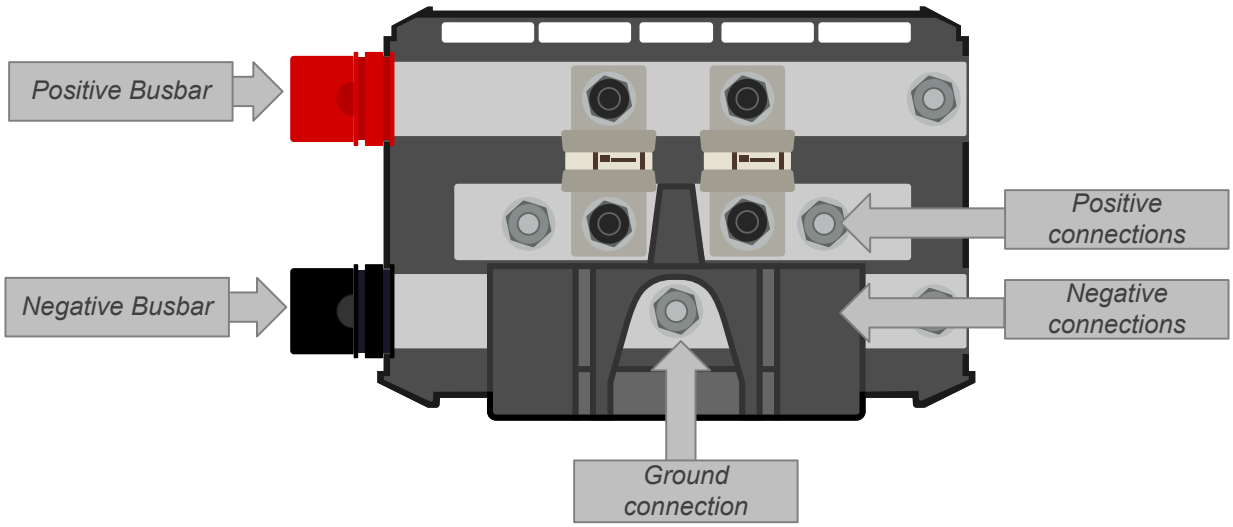

The internal physical parts of the Lynx Class-T Power In

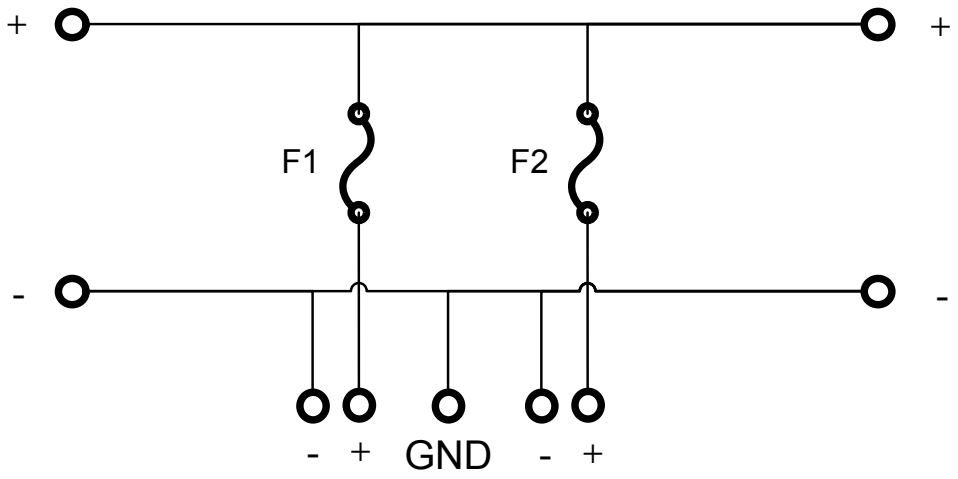

The internal wiring diagram of the Lynx Class-T Power In

4. System Design

4.1. Lynx distribution system parts

A Lynx distribution system usually consists of a single Lynx Smart BMS or Lynx Shunt VE.Can module together with a Lynx Class-T Power, Lynx Power In or Lynx Distributor.

The choice between a Lynx Shunt VE.Can or a Lynx Smart BMS depends on what type of batteries are used in the system. The Lynx Smart BMS can only be used with the Victron Energy Lithium Smart Batteries or in its NG version with Victron Energy Lithium NG Batteries, while the Lynx Shunt VE.Can is suitable for all other batteries.

Then, single, multiple or a combination of Lynx Distributor modules and/or Lynx Power In/Lynx Class-T Power In modules are added.

Together they form a continuous negative and positive busbar with DC connections and, depending on the configuration, integrated fuses, a battery monitor and/or lithium battery management.

It is also possible to use Lynx Power In modules, Lynx Class-T Power in and/or Lynx Distributor modules without a Lynx Smart BMS module or a Lynx Shunt VE.Can module. This is for situations where battery monitoring or battery management is not needed.

4.1.1. Interconnecting Lynx modules

Each Lynx module can be connected to other Lynx modules on the left and right. Note that M10 modules cannot be connected directly to M8 modules and vice versa.

If the Lynx module is the first in line, the last in line or is used by itself, it is possible to connect batteries, loads or chargers directly to these connections. Please note that additional fusing may be required if batteries and loads are connected directly to the interconnections.

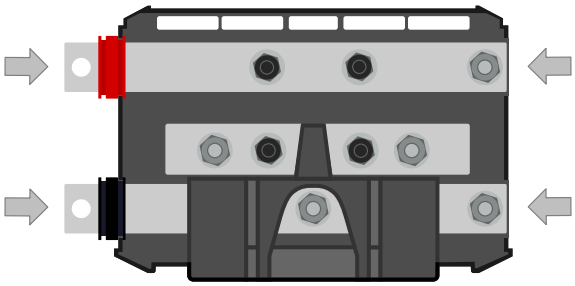

Lynx connections: The arrows indicate where the other Lynx modules can connect

The example below shows a Lynx system consisting of a Lynx Class-T Power In, Lynx Smart BMS and a Lynx Distributor. Together, they form a continuous busbar with fused battery and load connections, battery monitor, BMS system and contactor.

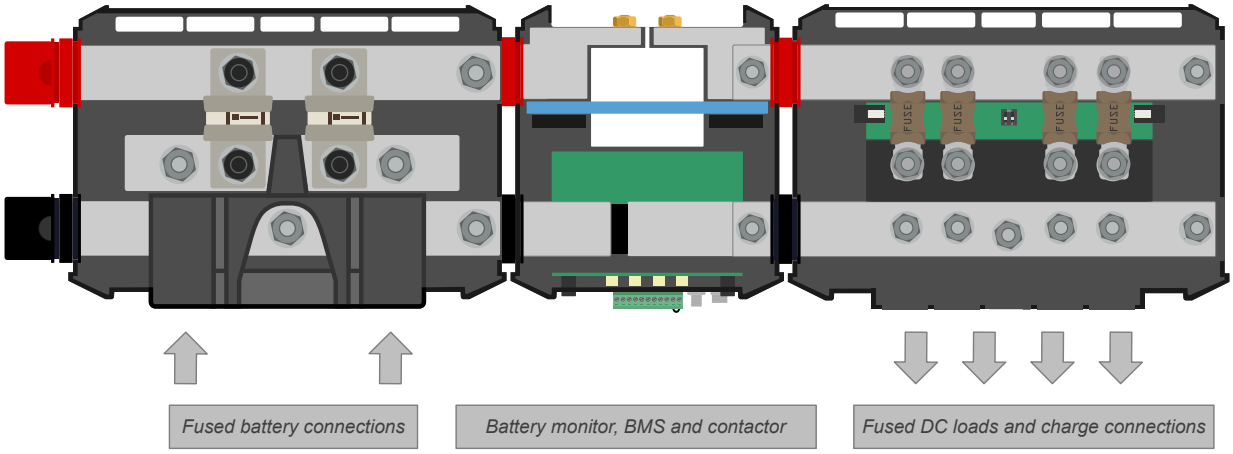

Interconnected Lynx modules: Lynx Class-T Power In, Lynx Smart BMS and a Lynx Distributor

4.1.2. Orientation of Lynx modules

If the Lynx System contains a Lynx Shunt VE.Can or Lynx Smart BMS, the batteries always have to be connected to the left side of the Lynx System and the rest of the DC system (loads and chargers) connect to the right side. This so the battery state of charge can be correctly calculated.

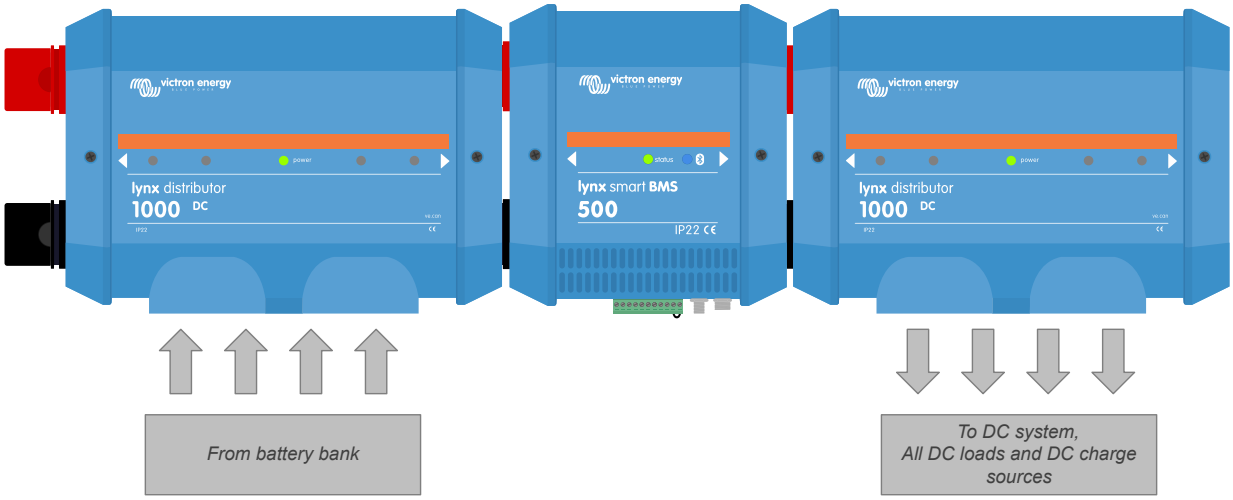

Example of Lynx module orientation: the batteries connect to the left side and all loads and chargers connect on the right side

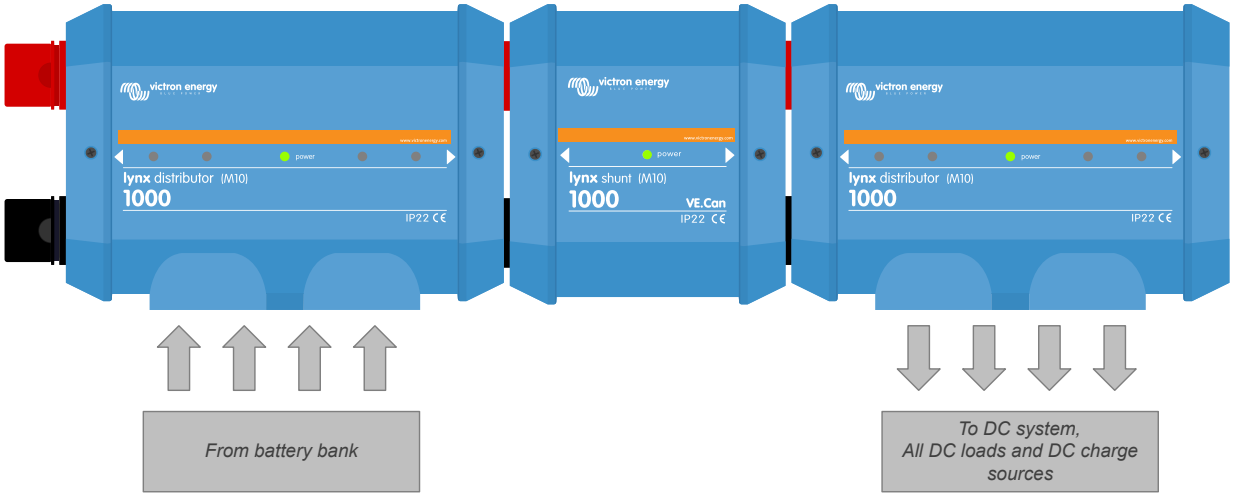

Example of Lynx module orientation: the batteries connect to the left side and all loads and chargers connect on the right side

The Lynx modules can be mounted in any orientation. Should they be mounted upside down so that the text on the front of the units is upside down as well, use the special stickers included with each Lynx module so that the text is orientated the correct way.

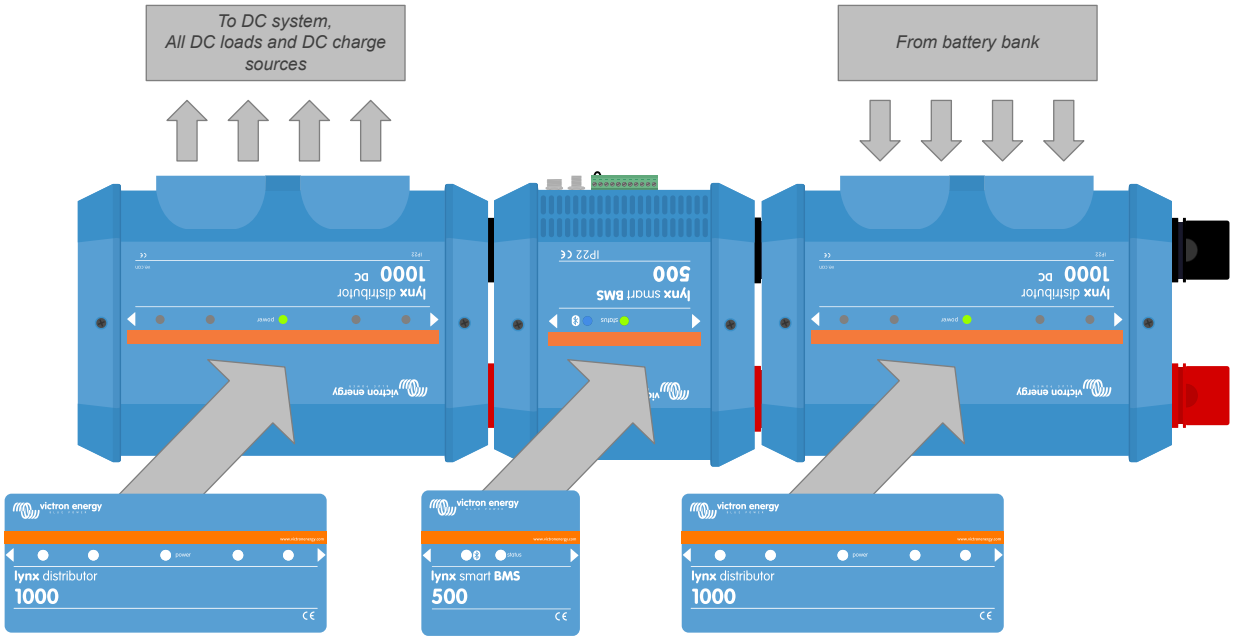

Example of Lynx modules mounted upside down: the batteries connect to the right side, all loads and chargers connect to the left side and the upside-down stickers are affixed.

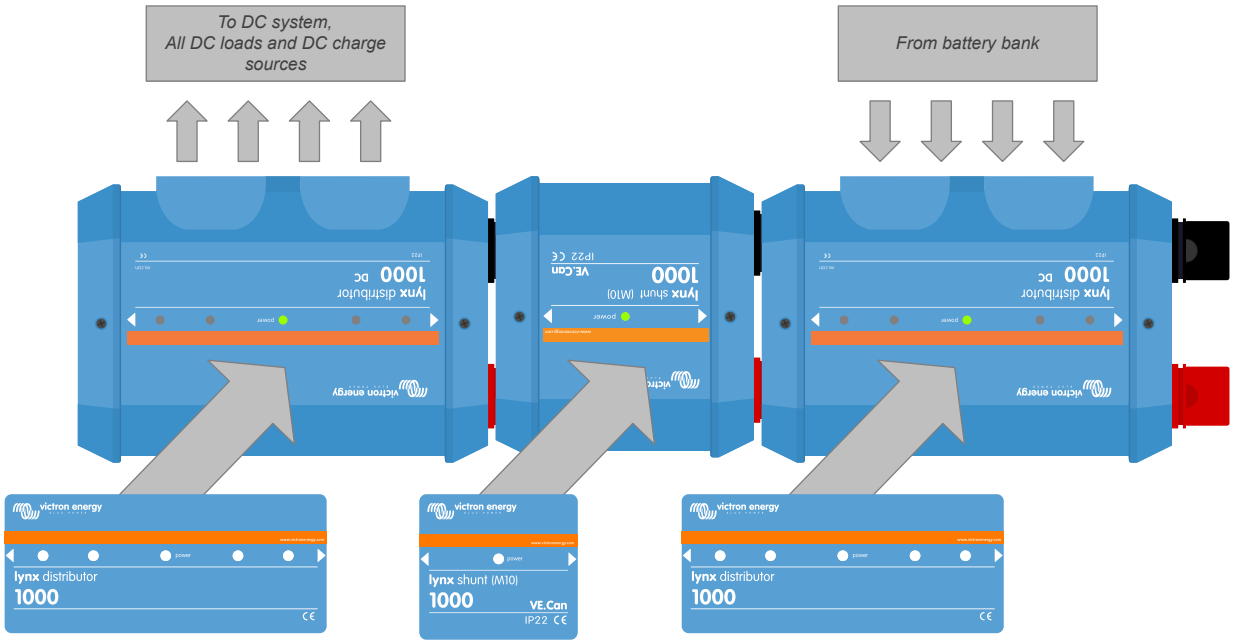

Example of Lynx modules mounted upside down: the batteries connect to the right side, all loads and chargers connect to the left side and the upside-down stickers are affixed.

4.1.3. System Example - Lynx Class-T Power In and Lynx Distributor

This system uses a Lynx Class-T Power In to create a fused battery connection. A Lynx Distributor serves as a fused busbar for DC loads.

Multiple Lynx Class-T Power In modules can be connected together, creating a longer busbar with more battery connections.

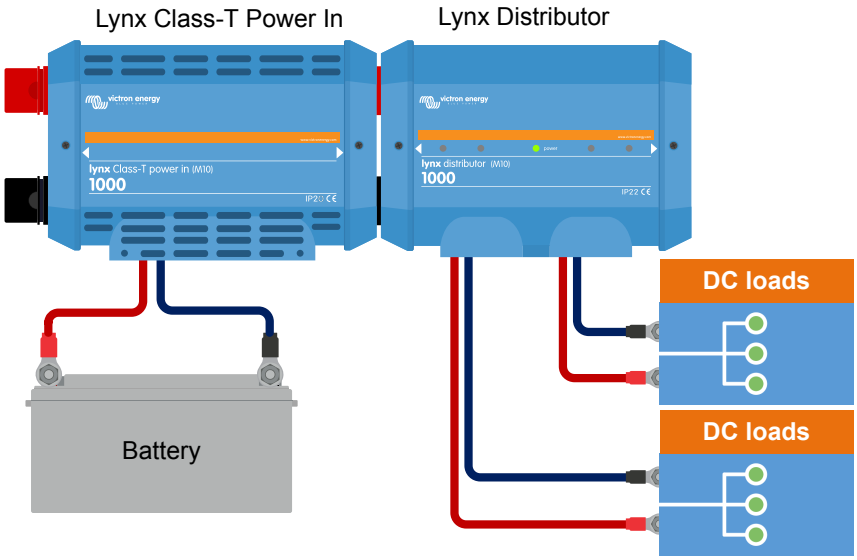

System with a Lynx Class-T Power In and Lynx Distributor

4.1.4. System example - Lynx Class-T Power In, Lynx Smart BMS and a Lynx Distributor

This system contains the following components:

- Lynx Class-T Power In with two fused paralleled lithium batteries and identical cable lengths for each battery
- Lynx Smart BMS with built-in contactor and battery monitor
- Lynx Distributor with fused connections for chargers, inverter/charger(s) and loads
- A Cerbo GX (or other GX device)

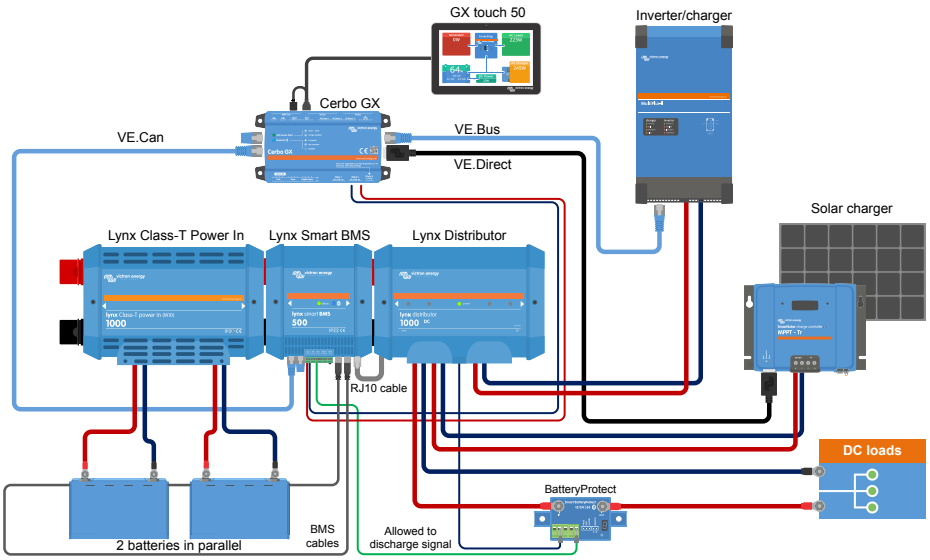

System with Lynx Class-T Power In, two lithium smart batteries, a Lynx Smart BMS and a Lynx Distributor

4.2. System sizing

4.2.1. Current rating Lynx modules

The Lynx Distributor, Lynx Shunt VE.Can, Lynx Class-T Power In and the Lynx Power In are rated for a nominal current of 1000A for 12, 24 or 48 System voltages.

See the table below for an idea of how much power the Lynx modules are rated at different voltages. The power rating will indicate how big the connected inverter/charger system can be. Remember that if inverters or inverter/chargers are used, the batteries will power both the AC and DC systems. Also, be aware that a Lynx Smart BMS or a Lynx Ion (now discontinued) can have a lower current rating.

	12V	24V	48V
1000A	12kW	24kW	48kW

4.2.2. Fusing

The Lynx Class-T Power In has spaces for two Class-T fuses, available in 225A, 250A, 300A, 350A and 400A and must be purchased separately. Victron does not stock them.

The maximum current that will flow in one Class-T Power In is therefore 800A (2x400A). If more fuses are required, a second Class-T Power In (or a Lynx Distributor) can be installed. The total current of 1000 A must not be exceeded.

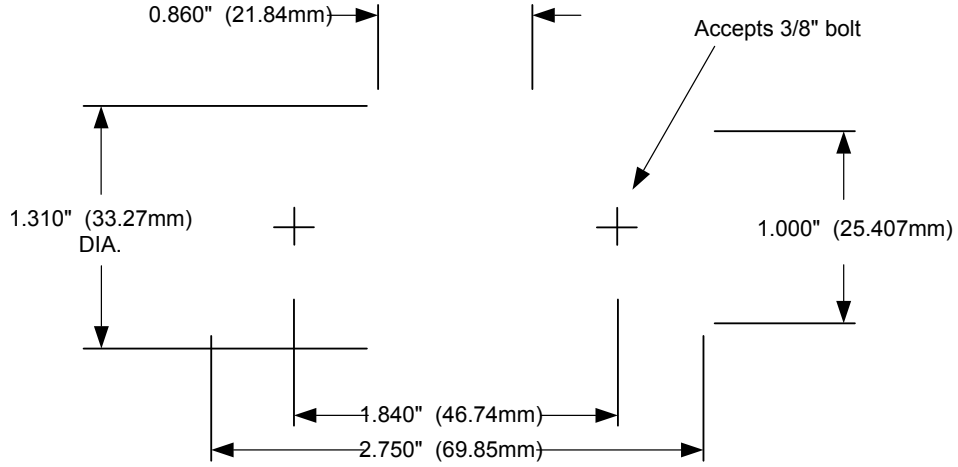

Class-T fuse dimensions in inches (mm)

Always use fuses with the correct voltage and current rating. Match the fuse rating to the maximum voltages and currents that potentially can occur in the fused circuit. For more information on fuse ratings and fuse current calculations see the Wiring Unlimited book.

The total value of the fuses of all circuits should not be more than the current rating of the Lynx module or the Lynx model with the lowest current rating in case of multiple Lynx modules are used.

The orientation of the Class-T fuses is important because their connection flanges are not always straight, regardless of the manufacturer. If the connection flanges are not lying flat on the busbar, turn the fuse 180° along its longitudinal axis.

Fasten the fuses with the 3/8" nuts marked black. Do not confuse these with the M10 nuts of the DC and busbar connections, otherwise the threads of the bolts may be damaged. Note that devices with a serial number starting with HQXXXX have M10 screws and nuts for the fuse connections. They are not marked black. There is no harm in confusing them with the other M10 screws and nuts.

4.2.3. Cabling

The current rating of cables used to connect the Lynx Class-T Power In to batteries , has to be rated for the maximum currents that can occur in the connected circuits. Use cabling with a sufficient core surface area to match the maximum current rating of the circuit.

For more information on cabling and cable thickness calculations, see our book, Wiring Unlimited.

5. Installation

5.1. Mechanical connections

5.1.1. Lynx module connection features

The Lynx module can be opened up by unscrewing the 2 cover screws.

The contacts on the left side are covered by a removable rubber sleeve.

Red is the positive and black is the negative busbar.

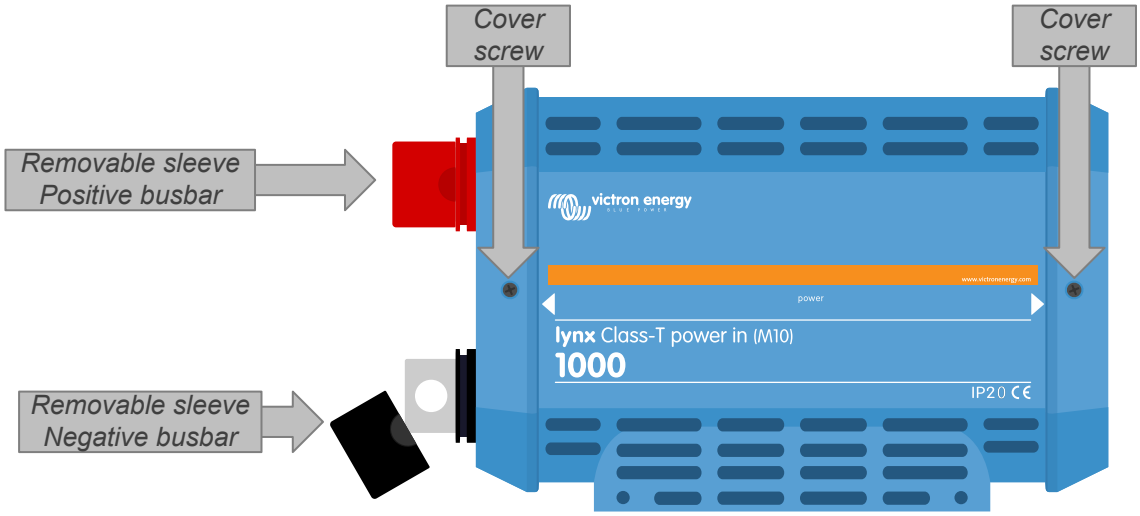

Location of front cover screws and the removable sleeves

5.1.2. Mounting and interconnecting Lynx modules

This paragraph explains how to attach several Lynx modules to each other and how to mount the Lynx assembly into its final location.

For a mechanical drawing of the housing with dimensions and the location of the mounting holes, see the Enclosure Dimensions of this manual.

These are the points to take into consideration when interconnecting and mounting Lynx modules:

- If Lynx modules are going to be connected to the right and if the Lynx module is fitted with a plastic barrier on the right side, remove the black plastic barrier. If the Lynx module is located as the most right module, leave the black plastic barrier in place.
- If Lynx modules are going to be connected to the left, remove the red and black rubber sleeves. If the Lynx module is located as the most left module, leave the red and black rubber sleeves in place.
- If the Lynx system contains a Lynx Smart BMS or Lynx Shunt VE.Can, the left side is the battery and the right side is the DC system side.
- Connect all Lynx modules to each other using the M10 holes and bolts on the left and right. Take care that the modules are correctly slotted into the rubber joiner recesses.
- Place the washer, spring washer and nut on the bolts and tighten the bolts using a torque of:

  33Nm

- Mount the Lynx assembly in its final location using the 5mm mounting holes.

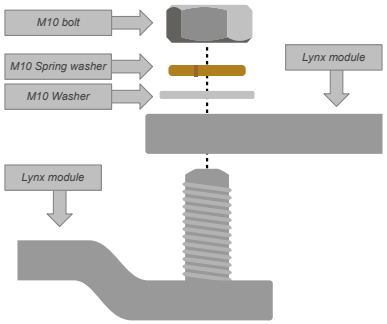

Correct placement of the M10 washer, spring washer and nut.

5.2. Electrical connections

5.2.1. Connect DC wires

This chapter might not apply if the Lynx module is connected to other Lynx modules like this can be the case for the Lynx Smart BMS or the Lynx Shunt VE.Can.

For all DC connections, the following applies:

- All cables and wires connected to the Lynx Class-T Power In need to have been fitted with M10 cable lugs. Cable lugs up to 120mm² or 3/8"-4/0 AWG can be used.
- Pay attention to the correct placement of the cable lug, washer, spring washer and nut on each bolt when attaching the cable to the bolt.
- Tighten the nuts using a torque of:

  33Nm

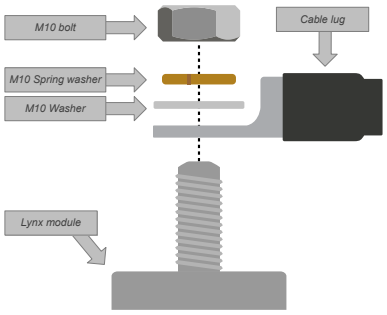

Correct placement of the M10 Cable lug, washer, spring washer and nut

5.2.2. Ground and Negative connections

Connect the ground wire

This only applies if the system requires a ground connection. There should only be one ground connection per system. The ground connection should be made after the Lynx Smart BMS, Lynx Shunt VE.Can or battery monitor shunt. For more information on system grounding, see the Wiring Unlimited book.

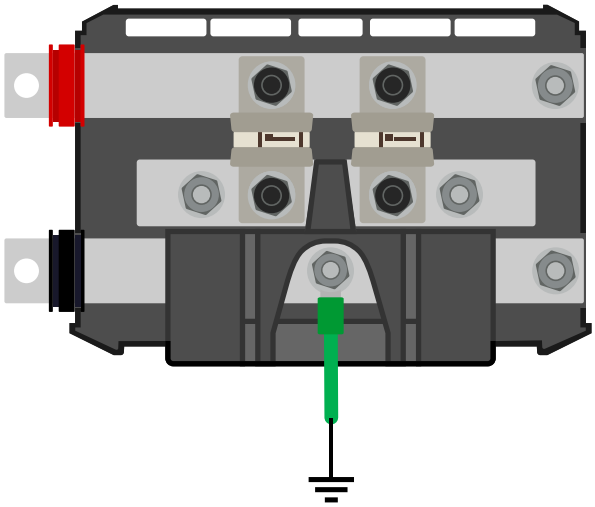

Ground connection Lynx Class-T Power In

Connect the negative wires

Remove the cable separator post if the wire diameter exceeds 10mm.

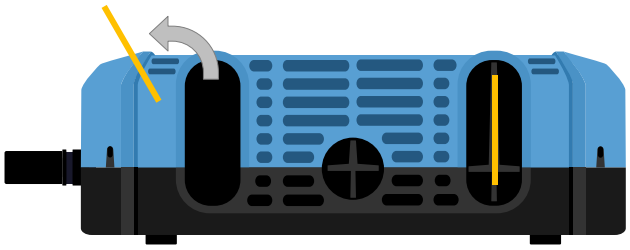

The cable separator posts are indicated in yellow

To reach the negative connections, swing the black cable separators upwards. The black cable separators can be temporarily removed by pulling them away from the Lynx Class-T Power In at a slight sideways angle in case better access is needed.

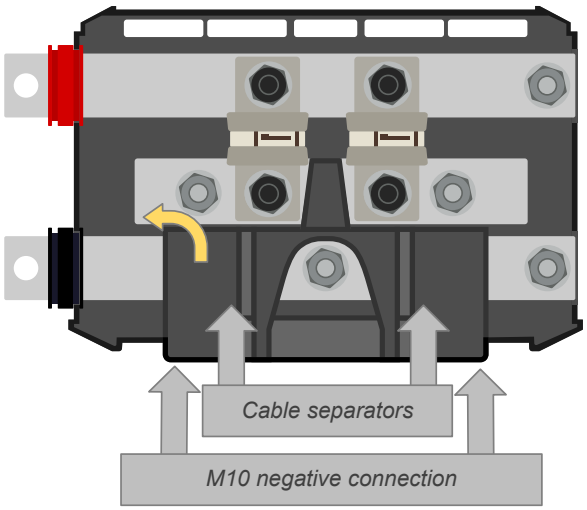

Flip up the cable separator to reach the negative connections

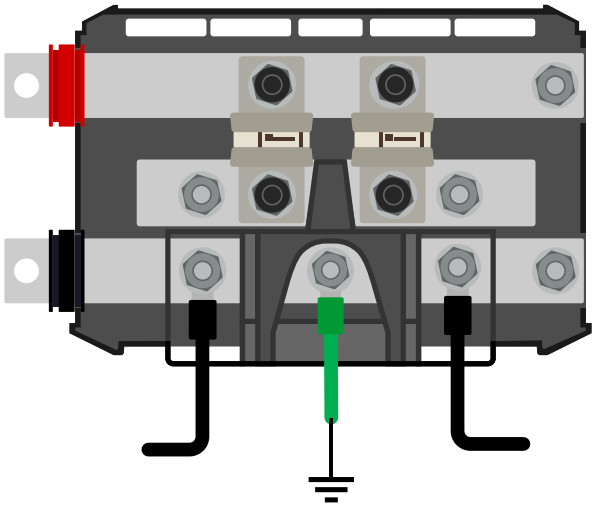

Negative connection Lynx Class-T Power In

5.2.3. Positive connections

> ⚠ Before making any positive connections, ensure the positive wires are not powered. Disconnect all positive cables from the battery before connecting them to the Lynx module. This to prevent accidental short circuits.

Connect all positive wires.

Power the Lynx system by connecting the positive battery pole(s).

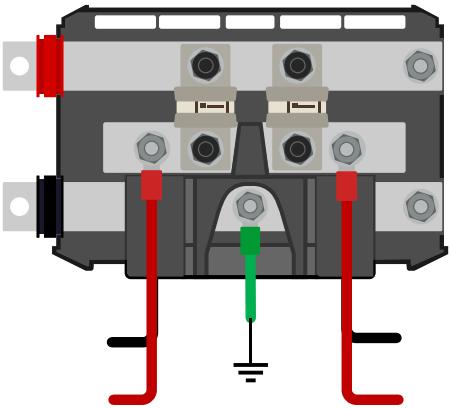

Connecting the positive wires Lynx Class-T Power In

6. Lynx Class-T Power In commissioning

Commissioning sequence:

- ☐ Check the polarity of all DC cables.
- ☐ Check the cross-sectional area of all DC cables.
- ☐ Check if all cable lugs have been crimped correctly.
- ☐ Check if all cable connections are tight (don’t exceed maximum torque).

7. Troubleshooting and Support

For unexpected behaviour or suspected product faults, refer to this chapter.

Start by checking the common issues described here. If the problem persists, contact the point of purchase (Victron dealer or distributor) for technical support.

If you're unsure who to contact or if the point of purchase is unknown, refer to the Victron Energy Support webpage.

7.1. Cabling issues

Cables heat up

This can be caused by a wiring or connection issue. Check the following:

- Check if all cable connections are tightened with a torque moment of 33Nm.
- Check if all fuse connections are tightened with a torque moment of 33Nm.
- Check if the surface area of the cable core is large enough for the current through that cable.
- Check if all cable lugs have been crimped correctly and are tight enough.

Other cabling issues

For additional information about issues that can arise from bad or incorrect cabling, cable connections or wiring of battery banks refer to the Wiring Unlimited Book.

8. Technical specifications Lynx Class-T Power In

Power	
Voltage range	9 - 60Vdc
Current rating	1000Adc continuous

Connections	
Busbar	M10
Fuses	3/8"

Physical	
Enclosure material	ABS
Enclosure dimensions (hxwxd)	279 x 169 x 97mm
Unit weight	2.1 kg
Busbar material	Tinned copper
Busbar dimensions (hxw)	8 x 30mm

Environmental	
Operating temperature range	-40°C to +60°
Storage temperature range	-40°C to +60°
Humidity	Max. 95% (non-condensing)
Protection class	IP20
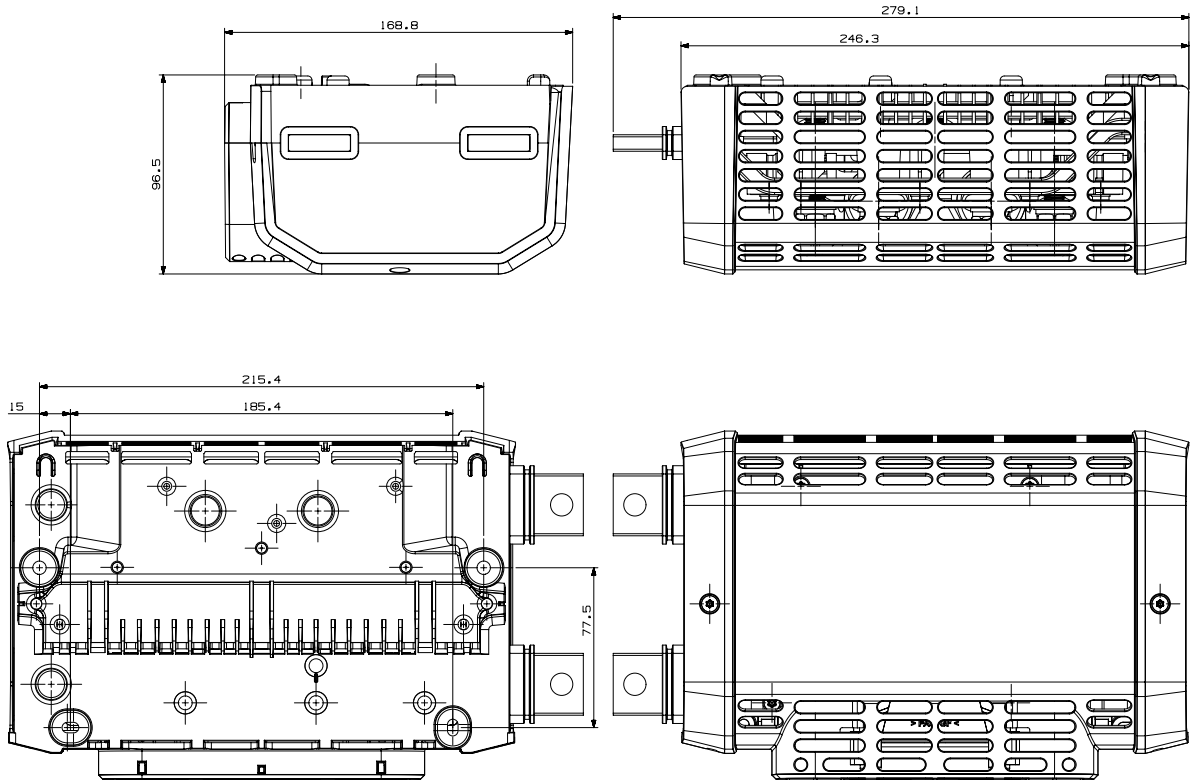
9. Enclosure Dimensions Lynx Class-T Power In